West Africa Professional Fiber Optic Sensor Manufacturer

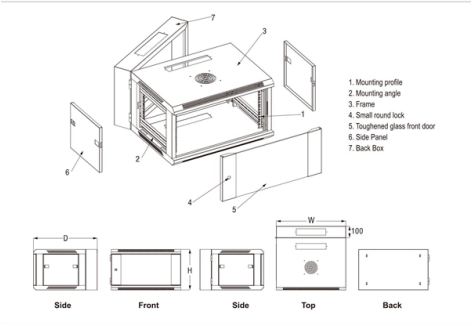

Overview

European manufacturer of high-quality passive fiber optic equipment and FTTH network components, operating since 1992.

Key Takeaways

Nia Fiber Africa Limited and NetworkSense Africa are leading professional fiber optic sensor manufacturers and solution providers in West Africa.Key Manufacturers and Suppliers

© 2026 ALFA PRO COMMUNICATION SYSTEMS (Pty) Ltd - All rights reserved

1. Nia Fiber Africa Limited Nia Fiber Africa Limited is a prominent fiber optic manufacturer in West Africa, offering a wide range of optical solutions for telecommunications and broadband networks. They provide end-to-end services, including fiber infrastructure solutions, accessories, and consulting. Their products are designed to meet global industry standards, supporting service providers, network operators, and developers in deploying next-generation communication networks efficiently and cost-effectively . 2. NetworkSense Africa NetworkSense Africa specializes in advanced fiber optic sensing technologies, including Distributed Acoustic Sensing (DAS), Distributed Temperature Sensing (DTS), and Distributed Strain and Temperature Sensing (DSTS). These systems are ideal for monitoring pipelines, power cables, bridges, and other critical infrastructure. Their solutions are scalable, cost-effective, and capable of operating in harsh environments while providing real-time, precise data . 3. Verified Wholesale Suppliers Platforms like go4WorldBusiness list multiple verified fiber optic sensor manufacturers and suppliers in West Africa. These suppliers offer bulk purchasing options, competitive pricing, and trusted deals for industrial and commercial applications. Buyers can connect directly with manufacturers to source specialized fiber optic sensors for various applications .

Applications and Advantages

• Telecommunications and Broadband: High-speed data transmission and network monitoring.

• Industrial Monitoring: Real-time detection of temperature, strain, and vibrations in critical infrastructure.

• Harsh Environment Resilience: Fiber optic sensors are immune to electromagnetic interference and can operate reliably in extreme heat, humidity, or remote locations.

• Scalability: Solutions can cover extensive areas, from urban networks to remote industrial sites.

Conclusion

For professional fiber optic sensor solutions in West Africa, Nia Fiber Africa Limited and NetworkSense Africa are leading manufacturers offering both products and integrated services. Additionally, verified suppliers on platforms like go4WorldBusiness provide access to bulk orders and specialized sensors suitable for industrial, telecommunications, and infrastructure applications . These companies ensure high-quality, reliable, and scalable fiber optic solutions tailored to the region's needs.

© 2026 ALFA PRO COMMUNICATION SYSTEMS (Pty) Ltd - All rights reserved

Article Content

west-africa-professional-fiber-optic-sensor-manufacturer

European manufacturer of high-quality passive fiber optic equipment and FTTH network components, operating since 1992. We

west-africa-professional-fiber-optic-sensor-manufacturer ...

European manufacturer of high-quality passive fiber optic equipment and FTTH network components, operating since 1992. We

Distributed Fiber Optic Sensing and Monitoring

At Sintela, we are redefining the future of Distributed Fiber Optic Sensing (DFOS) technology. As a global

Home

Established in 2001, Fiberlogix is a leading provider of passive optical components, designed mainly for telecommunication, fiber

Fiber Optic Sensor Manufacturer West Africa Buyers & Importers ...

Sell Fiber Optic Sensor Manufacturer West Africa in bulk to verified buyers and importers. Connect with businesses actively looking

Fiber Optical sensors for Industrial applications

Fiber optic solutions for industrial applications: temperature, pressure, displacement, strain by Opsens Solutions. Contact us.

Fiber Optic Sensor Manufacturer West Africa Wholesale Suppliers ...

Buy premium Fiber Optic Sensor Manufacturer West Africa in bulk from verified wholesale suppliers and manufacturers. Best prices,

SENTEA Fiber Optic Sensing

SENTEA has the ambition to become a market leader in fiber optic sensor interrogators leveraging the benefits of Silicon Photonics.

About Us | NetworkSense Africa

Learn about us and how we provides cutting-edge fiber optic sensing technology to secure and monitor critical infrastructure.

Fiber optic sensors for industries

© 2026 ALFA PRO COMMUNICATION SYSTEMS (Pty) Ltd - All rights reserved

Opsens Solutions'' fiber optic for temperature, pressure, strain & displacement for industries. Opsens Solutions offers sensors and

NiaFiber

About Us We Are Trusted Fiber Manufacturing Company Our technological heritage includes the first to

National Center for Biotechnology Information

We would like to show you a description here but the site won''t allow us.

Fiber Optic Sensors Market Growth Analysis

The development of data analysis algorithms and wireless sensor networks has also facilitated the deployment of fiber optic sensors

109 Fiber Optic Cable Manufacturers in 2026

This section provides an overview for fiber optic cables as well as their applications and principles. Also, please take a look at the list

Optical Fiber Medical Sensors Market in Western Africa | Report ...

The Western Africa Optical Fiber Medical Sensors market sits at the intersection of clinical safety, radiology

Middle East and Africa Fiber Optic Sensor Market

A few major primary and secondary sources referred to for preparing this report on the fiber optic sensor market in Middle East and

Fiber Optic Sensors < Sensors

Fiber Optic Sensors from the EngNet Engineering directory and search engine. Find suppliers, manufacturers and distributors for

Case Study of Fiber Optic Sensors in West Africa

Case Study of Fiber Optic Sensors in West Africa RP OPTICS delivers premium fiber optic cables, drop cables, splice closures,

Sensorlines | Distributed Fiber Optic Sensing Technology

Sensorlines delivers world-class Distributed Fiber Optic Sensing (DFOS) solutions for pipeline monitoring, cable monitoring, and well

NiaFiber

About Us We Are Trusted Fiber Cables Manufacturing Company Our technological heritage includes the first to market offerings for

© 2026 ALFA PRO COMMUNICATION SYSTEMS (Pty) Ltd - All rights reserved

Fiber-optic Sensors – Buyer''s Guide & Suppliers

This buyer''s guide for fiber-optic sensors provides technical background, comparison of major types, selection criteria, and an

Optical Sensors Market Size & Share, Growth Opportunity 2035

The optical sensors market was valued at USD 26.6 billion in 2025 and is expected to grow at a CAGR of 10.4% between 2026 and

Coleman opens massive new fibre optic factory in Nigeria

The Federal Government has inaugurated Coleman Industries Ltd''s new fibre optic cable

Fiber Optic Sensors Market size was USD 1.4 billion in 2023!

The Global Fiber Optic Sensors Market size will be USD 1.4 billion in 2023 and grow at a compound annual growth rate (CAGR) of

Distributed Fiber Optic Sensor Companies

Halliburton is engaged in manufacturing and marketing of distributed fiber optic sensing products with real-time fiber analytics

Industrial Fiber Optics

Global Distribution Links: Authorized distributor for Asahi Kasei and Mitsubishi Chemical, two of the world''s leading polymer optical

Fiber Optic Sensor Market

The Fiber Optic Sensor Market is benefiting from advancements in manufacturing processes that enhance the

FIBER OPTIC SENSORS AND THEIR APPLICATIONS

In parallel with these developments, fiber optic sensor technology has been a significant user of technology related with the

Africa Distributed Fiber Optic Sensor Market (2025-2031 ...

6Wresearch actively monitors the Africa Distributed Fiber Optic Sensor Market and publishes its comprehensive annual report,

Fiber Fusion Splicer | AI-9 Splice Machine | 6 Motors | Power Meter

The AI-9 Splicing Machine use the latest fiber core alignment technology with auto focus and six motors, it is a new generation of

NiaFiber

© 2026 ALFA PRO COMMUNICATION SYSTEMS (Pty) Ltd - All rights reserved

About Us We Are Trusted Fiber Manufacturing Company Our technological heritage includes the first to

National Center for Biotechnology Information

We would like to show you a description here but the site won''t allow us.

Fiber Optic Sensors Market Growth Analysis

The development of data analysis algorithms and wireless sensor networks has also facilitated the deployment of fiber optic sensors

109 Fiber Optic Cable Manufacturers in 2026

This section provides an overview for fiber optic cables as well as their applications and principles. Also, please take a look at the list

Optical Fiber Medical Sensors Market in Western Africa | Report ...

The Western Africa Optical Fiber Medical Sensors market sits at the intersection of clinical safety, radiology

Middle East and Africa Fiber Optic Sensor Market

A few major primary and secondary sources referred to for preparing this report on the fiber optic sensor market in Middle East and

Fiber Optic Sensors Conferences 2026/2027/2028

Fiber Optic Sensors Conferences 2026 2027 2028 is for the researchers, scientists, scholars, engineers, academic, scientific and

Home

FISO is a leading developer and manufacturer of fiber optic sensors & signal conditioners used in medical,

Lightera Optical Fiber & Connectivity Solutions

Industrial Networks Rugged, durable, and reliable optical fiber systems for digital manufacturing, automation, energy monitoring and

Fiber Optic Sensing | NetworkSense Africa

Fiber optic sensing technology is revolutionizing the way industries monitor, protect, and manage critical infrastructure. By using

Fiber Optic Sensors < Sensors

Fiber Optic Sensors from the EngNet Engineering directory and search engine. Find suppliers, manufacturers and distributors for

© 2026 ALFA PRO COMMUNICATION SYSTEMS (Pty) Ltd - All rights reserved

Case Study of Fiber Optic Sensors in West Africa

Case Study of Fiber Optic Sensors in West Africa RP OPTICS delivers premium fiber optic cables, drop cables, splice closures,

Sensorlines | Distributed Fiber Optic Sensing Technology

Sensorlines delivers world-class Distributed Fiber Optic Sensing (DFOS) solutions for pipeline monitoring, cable monitoring, and well

NiaFiber

About Us We Are Trusted Fiber Cables Manufacturing Company Our technological heritage includes the first to market offerings for

west-africa-professional-fiber-optic-sensor-manufacturer

European manufacturer of high-quality passive fiber optic equipment and FTTH network components, operating since 1992. We

west-africa-professional-fiber-optic-sensor-manufacturer ...

European manufacturer of high-quality passive fiber optic equipment and FTTH network components, operating since 1992. We

Distributed Fiber Optic Sensing and Monitoring

At Sintela, we are redefining the future of Distributed Fiber Optic Sensing (DFOS) technology. As a global

Home

Established in 2001, Fiberlogix is a leading provider of passive optical components, designed mainly for telecommunication, fiber

Fiber Optic Sensor Manufacturer West Africa Buyers & Importers ...

Sell Fiber Optic Sensor Manufacturer West Africa in bulk to verified buyers and importers. Connect with businesses actively looking

Fiber Optical sensors for Industrial applications

Fiber optic solutions for industrial applications: temperature, pressure, displacement, strain by Opsens Solutions. Contact us.

Fiber Optic Sensor Manufacturer West Africa Wholesale Suppliers ...

Buy premium Fiber Optic Sensor Manufacturer West Africa in bulk from verified wholesale suppliers and manufacturers. Best prices,

SENTEA Fiber Optic Sensing

© 2026 ALFA PRO COMMUNICATION SYSTEMS (Pty) Ltd - All rights reserved

SENTEA has the ambition to become a market leader in fiber optic sensor interrogators leveraging the benefits of Silicon Photonics.

About Us | NetworkSense Africa

Learn about us and how we provides cutting-edge fiber optic sensing technology to secure and monitor critical infrastructure.

Fiber optic sensors for industries

Opsens Solutions'' fiber optic for temperature, pressure, strain & displacement for industries. Opsens Solutions offers sensors and

west-africa-professional-fiber-optic-sensor-manufacturer

European manufacturer of high-quality passive fiber optic equipment and FTTH network components, operating since 1992. We

west-africa-professional-fiber-optic-sensor-manufacturer ...

European manufacturer of high-quality passive fiber optic equipment and FTTH network components, operating since 1992. We

Distributed Fiber Optic Sensing and Monitoring

At Sintela, we are redefining the future of Distributed Fiber Optic Sensing (DFOS) technology. As a global

Home

Established in 2001, Fiberlogix is a leading provider of passive optical components, designed mainly for telecommunication, fiber

Fiber Optic Sensor Manufacturer West Africa Buyers & Importers ...

Sell Fiber Optic Sensor Manufacturer West Africa in bulk to verified buyers and importers. Connect with businesses actively looking

Fiber Optical sensors for Industrial applications

Fiber optic solutions for industrial applications: temperature, pressure, displacement, strain by Opsens Solutions. Contact us.

Fiber Optic Sensor Manufacturer West Africa Wholesale Suppliers ...

Buy premium Fiber Optic Sensor Manufacturer West Africa in bulk from verified wholesale suppliers and manufacturers. Best prices,

SENTEA Fiber Optic Sensing

© 2026 ALFA PRO COMMUNICATION SYSTEMS (Pty) Ltd - All rights reserved

SENTEA has the ambition to become a market leader in fiber optic sensor interrogators leveraging the benefits of Silicon Photonics.

About Us | NetworkSense Africa

Learn about us and how we provides cutting-edge fiber optic sensing technology to secure and monitor critical infrastructure.

Fiber optic sensors for industries

Opsens Solutions'' fiber optic for temperature, pressure, strain & displacement for industries. Opsens Solutions offers sensors and

Related Video Reference

This video was associated with the source search result. Verify technical details against current product documentation and project requirements.

Contact Us

Continue your research online:

Website: https://alfa-pro.co.za
Technical inquiry: https://alfa-pro.co.za/contact.html

This document is for preliminary research. Verify specifications against current standards, product documentation and project requirements.

© 2026 ALFA PRO COMMUNICATION SYSTEMS (Pty) Ltd - All rights reserved