Temporary lighting power distribution box

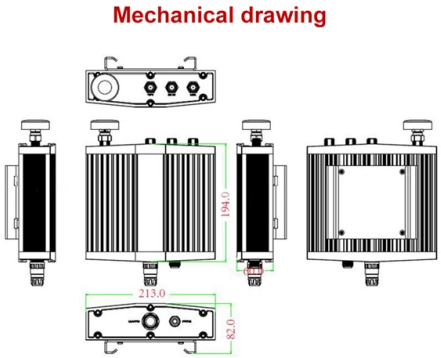

Overview

Temporary power distribution boxes for flexible electrical installation. Robust solutions for construction sites, events and temporary energy infrastructure.

Key Takeaways

Temporary power distribution boxes provide portable, safe, and reliable power for lighting and equipment in construction, events, and emergency situations.

Overview

Temporary power distribution boxes, also known as spider boxes or portable PDUs, are designed to distribute electricity from a main source to multiple devices and lighting setups in locations where permanent power infrastructure is unavailable or under maintenance. They are widely used on construction sites, outdoor events, disaster recovery operations, and industrial projects.

Key Features

Portability and Durability: These boxes are built with rugged enclosures to withstand harsh environments, including rain, dust, and heavy handling. Multiple Outlets: They provide several outlets for connecting tools, machinery, and industrial lighting, often including both standard 120V/240V single-phase and 120/208V or 277/480V three-phase options. Safety Features: Modern units include GFCI protection, overcurrent breakers, weatherproof covers, and high-voltage shutoff protection, ensuring safe operation in temporary setups.

© 2026 ALFA PRO COMMUNICATION SYSTEMS (Pty) Ltd - All rights reserved

Flexibility: Many units allow easy extension and pluggable connections, making them adaptable to changing site requirements.

Lighting Applications

Temporary power boxes are often paired with industrial lighting solutions, such as LED light towers or explosion-proof lights, to illuminate work areas safely and efficiently. These lighting setups are crucial for: Construction and maintenance work during low-light conditionsEmergency response during power outages or natural disastersHazardous environments, where specialized lighting reduces the risk of sparks or accidents Types of Temporary Power BoxesSpider Boxes: Compact, portable units with multiple outlets, ideal for small to medium setups. Remote Distribution Centers: Larger units capable of handling high-power industrial equipment and multiple lighting circuits.

Custom Configurations: Some manufacturers offer configurable boxes with specific connectors, circuit breakers, and IP ratings to match site requirements.

Benefits

Reliable Power Supply: Ensures continuous operation of tools and lighting even during outages or shutdowns. Enhanced Safety: Built-in protection features reduce electrical hazards. Operational Efficiency: Quick setup and mobility minimize downtime and improve productivity.

Versatility: Suitable for indoor and outdoor applications, including confined spaces and hazardous areas.

Conclusion

Temporary power distribution boxes combined with industrial lighting provide a safe, flexible, and efficient solution for powering equipment and illuminating work areas in temporary or emergency situations. Selecting the right box depends on load requirements, environmental conditions, and safety standards, ensuring reliable performance for any project or event.

© 2026 ALFA PRO COMMUNICATION SYSTEMS (Pty) Ltd - All rights reserved

Article Content

Temporary Power Distribution Boxes for Electrical Installation

Temporary power distribution boxes for flexible electrical installation. Robust solutions for construction sites, events and temporary energy infrastructure.

Spider Boxes | Temporary Power | Hubbell Wiring Device-Kellems

Discover Hubbell Wiring Device-Kellems'' spider boxes for reliable, versatile temporary power in harsh environments. Ideal for construction sites and outdoor events.

Expert Guide: Selecting Temporary Power Distribution

Temporary power distribution boxes handle that role, routing electricity where it needs to go while keeping workers and equipment out of harm''s way.

Expert Guide: Select the Right Temporary Power Distribution Box

Safe and efficient power management requires reliable temporary power distribution boxes at construction sites, events, and emergency operations. These versatile units substantially reduce

Amazon : Power Distribution Box

Browse power distribution boxes with circuit breaker protection and multiple outlet configurations. Shop durable solutions for construction and emergency use.

Temporary Power Block | Engineered Products

EPCO''s Temp Power Block is a 50-amp portable temporary power distribution box designed for construction sites, outdoor events, commercial renovations, and

Amazon : Temporary Power Box

PREMIUM CONSTRUCTION POWER DISTRIBUTION BOX: Crafted by WESTERN, the 6506TLSX Temp power box features a durable blend material for long-lasting performance in demanding

Power Distribution Box

Compact and versatile, the Power Distribution Box is easy to transport, quick to deploy, and simple to maintain. Can be used to supply power to our 30A Power

A Guide to Temporary Power Distribution Boxes | ATI

If you are managing an operation or event that calls for a sustained electrical power supply, but is also located in an area where electricity is not

© 2026 ALFA PRO COMMUNICATION SYSTEMS (Pty) Ltd - All rights reserved

Temporary Power Distribution

When it comes to Temporary Power Distribution, you can count on Grainger. Supplies and solutions for every industry, plus easy ordering, fast delivery and 24/7 customer support.

Temporary Power Distribution Boxes

Temporary Power Box, U-Ground T-Slot Temporary Power Box, U-Ground T-Slot, NEMA 3R, (6) 20 Amp Circuit Breaker Protected Outlets, Circuit Breaker Protected 30 Amp 250V Receptacle, 50 Amp

what is a temporary power distribution box?

The temporary power distribution box is a power distribution device designed for short-term power consumption scenarios. It is used to safely and

Power Distribution Box, Temporary Power Distribution

Power Distribution Box, Temporary Power Distribution Center, 50A California Standard Twist-to-Lock, Ideal for Temporary Power Needs Brand: Zuomeng

Temporary Power

Voltec 2ft Vinyl Temporary Y Adapter – Flexible Power Splitter Cable Pricing Not Available Online Voltec 6 GFCI Temporary Power Box with U-Ground T-Slot Outlets and Built in Wheel Base – Portable

Temporary Power

Portable Outlet Boxes Portable Electrical Outlet Boxes from Leviton are the perfect solution for creating OSHA and NEC Compliant portable power pendants and

How To Get Temporary Power for Your Construction Site | BigRentz

Temporary Power Box A temporary power box, also known as a power spider box, is a portable electrical enclosure that provides temporary electrical power distribution on construction

Common Applications for Temporary Power Distribution Boxes

Events Large outdoor events such as carnivals, fairs, concerts, and seasonal festivals require temporary power distribution for a bevy of reasons. From lighting equipment to vendor

Temporary Power Distribution for Job Sites | Lowe''s

Temporary power distribution equipment supports safe power access for construction sites, events, and temporary setups. Check availability for reliable power solutions.

© 2026 ALFA PRO COMMUNICATION SYSTEMS (Pty) Ltd - All rights reserved

Contact Us

Continue your research online:

Website: https://alfa-pro.co.za
Technical inquiry: https://alfa-pro.co.za/contact.html

This document is for preliminary research. Verify specifications against current standards, product documentation and project requirements.

© 2026 ALFA PRO COMMUNICATION SYSTEMS (Pty) Ltd - All rights reserved