How to use a fiber optic cable blower

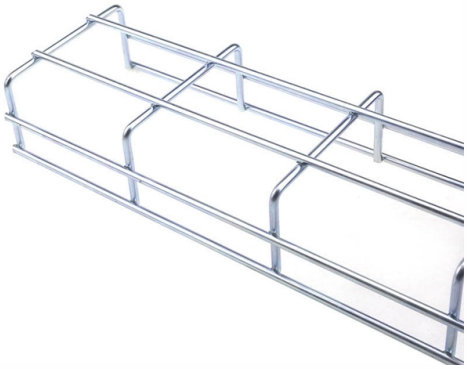

Overview

The process typically involves attaching a specially designed push-in or push-out device to the fiber cable, which is then connected to the blowing apparatus.

Article Content

How to Blow Fiber Optic Cable

The process typically involves attaching a specially designed push-in or push-out device to the fiber cable, which is then connected to the blowing apparatus. Compressed air is introduced

Fiber Optic Cable Blowing Procedure: Full Guide (2024)

Fiber optic cable blowing, also known as fiber jetting, is the most efficient and cost-effective technique for installing fiber optic cables into pre

Video: How to Use the Jetting V2 Fiber Blowing Machine

The Jetting V2 Fiber Blowing Machine is a robust, pneumatic-operated tool for installing single cables and relining multiple micro ducts. See training video.

Master the Blow: A Step-by-Step Guide to Blowing Fiber with Cable

Learn how to blow fiber like a pro with this comprehensive step-by-step guide to using cable jet machines. Enhance your telecommunications skills and embrace the future of efficient

Installation of Optical Fiber Cable by Blowing/Jetting

© 2026 ALFA PRO COMMUNICATION SYSTEMS (Pty) Ltd - All rights reserved

ABSTRACT This application note discusses fiber optic cable installation by blowing technique, the factors effecting blowing performance and best practices.

Condux Gulfstream 400 Fiber Optic Cable Blower

Install fiber optic cable quickly and efficiently with the Condux Gulfstream 400 Fiber Optic Cable Blower. Designed for versatility, safety, and speed—up to 300 fpm.

Fiber Optic Cable Types Explained

Our comprehensive guide to types of fiber optic cables. Learn all about the differences between single mode and multimode cables, as well as the various fiber wavelengths and standard core sizes used

Single Mode vs. Multimode Fiber Optic Cables

There are two main types of fiber optic cables: single mode and multimode. Although they can do the same job in some instances, the different

Finding the Right Size Innerduct Conduit for Fiber Optic Cable

While innerduct protects fiber optic cables installed throughout telecommunications spaces and pathways, it is also ideal for segregating and managing cables. The standard color for

Fiber Optics and Types

Fiber optic cables are used for long-distance and high-performance data networking. They are capable of transmitting data over longer distances and at higher bandwidths (data rates) than

Outdoor Fiber Optic Cable: Installation & Selection Guide

This document serves as a guide for outdoor fiber optic cable selection and installation for professionals in the telecommunications industry. It begins by highlighting the need for outdoor

Cost of Fiber Optic Cable: Pricing Guide (2026)

Discover the cost of fiber optic cable in this pricing guide. Learn material prices, installation factors, and what impacts total project costs overall.

Indoor Fiber Optic Cable Types: Top 12 List

Indoor cables connect devices within homes, office buildings, data centers, and other interior spaces. Selecting the right indoor optical fiber cable depends on factors like transmission distance, space

original-fiber-optic-sensor-manufacturer-in-nauru

© 2026 ALFA PRO COMMUNICATION SYSTEMS (Pty) Ltd - All rights reserved

19 Companies and suppliers for original-fiber-optic-sensor-manufacturer-in-nauru Find wholesalers and contact them directly Leading B2B martketplace Find companies now!

What Is Fiber Optics? A Guide

Streaming a movie, making a phone call, or getting an endoscopy may seem like disparate experiences, but they share a common thread: They''re connected by an invisible network

nanjing-jinhai-optical-fiber-network-co

18 Companies and suppliers for nanjing-jinhai-optical-fiber-network-co Find wholesalers and contact them directly Leading B2B martketplace Find companies now!

How to Connect Multiple Ethernet Switches Using Fiber Optic Cables ...

To connect multiple Ethernet switches, the best way is to use a multi-strand fiber cable. The 4-strand pre-terminated fiber optic cable consists of four individual strands or fibers of glass or

Advantages and Disadvantages of Fibre Optic Cable

Fiber optic cables allow much more cable than copper twisted pair cables. Fiber optic cables have how more bandwidth than copper twisted pair cables. Disadvantages of Fiber Optic

Related Video Reference

This video was associated with the source search result. Verify technical details against current product documentation and project requirements.

© 2026 ALFA PRO COMMUNICATION SYSTEMS (Pty) Ltd - All rights reserved

Contact Us

Continue your research online:

Website: https://alfa-pro.co.za
Technical inquiry: https://alfa-pro.co.za/contact.html

This document is for preliminary research. Verify specifications against current standards, product documentation and project requirements.

© 2026 ALFA PRO COMMUNICATION SYSTEMS (Pty) Ltd - All rights reserved