How many busbars should be configured in the distribution box

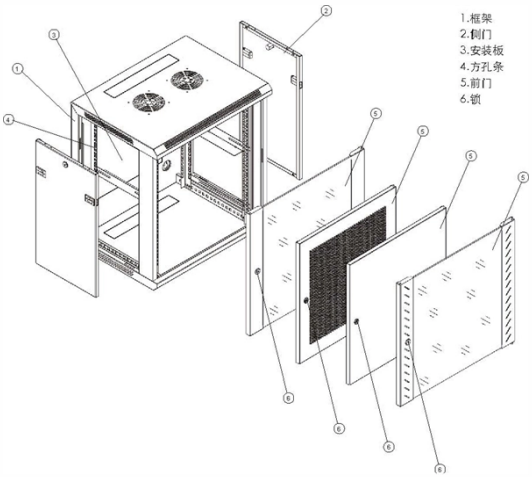

Overview

Busbar Sizing & Design Guide | Distribution Panels — Power Explore comprehensive busbar sizing and design tips for distribution panels to enhance efficienc.

Key Takeaways

A standard distribution box typically contains three main busbars: a power busbar, a neutral busbar, and a grounding busbar.Types of Busbars
• Power Busbar: Carries the main current from the incoming supply and distributes it to all outgoing circuits through MCBs or other protective devices .

• Neutral Busbar: Provides a return path for current from all circuits back to the source, ensuring proper circuit completion and safety .

• Grounding Busbar: Connects all protective earth wires to maintain safety and prevent electric shocks .
Additional Details
• In single-phase residential distribution boxes, you usually find one power busbar, one neutral bar, and one earth bar .

• In three-phase or industrial panels, there may be three separate phase busbars (L1, L2, L3), along with a neutral and grounding busbar, totaling five busbars .

© 2026 ALFA PRO COMMUNICATION SYSTEMS (Pty) Ltd - All rights reserved

• The exact number can vary depending on the size of the distribution box, number of circuits, and system type (single-phase or three-phase) but the three fundamental types remain consistent . Busbars are essential for efficient, safe, and organized power distribution, allowing multiple circuits to connect without excessive wiring clutter and ensuring proper current handling within the panel .

Article Content

Understanding Busbars: The Backbone Of Electrical Power Distribution ...

Busbars are critical in electrical power distribution for several reasons. First, they provide a streamlined and efficient way to distribute

Contact Us

Continue your research online:

Website: https://alfa-pro.co.za
Technical inquiry: https://alfa-pro.co.za/contact.html

This document is for preliminary research. Verify specifications against current standards, product documentation and project requirements.

© 2026 ALFA PRO COMMUNICATION SYSTEMS (Pty) Ltd - All rights reserved