Factory Control Cabinet Wiring Standard Diagram

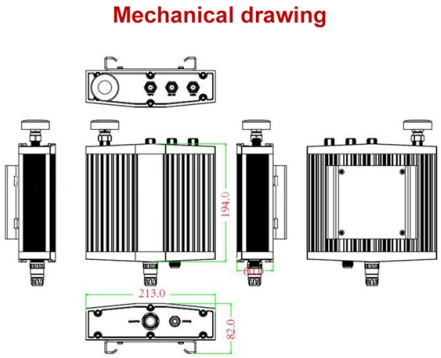

Overview

This guide will give you and overview of the most popular RS PRO parts for professional wiring of a control cabinet.

© 2026 ALFA PRO COMMUNICATION SYSTEMS (Pty) Ltd - All rights reserved

Frequently Asked Questions

What is a PLC Cabinet?

A PLC Cabinet is a secure enclosure that houses a Programmable Logic Controller (PLC) and its accessories, offering protection from environmental a...

What is PLC and PCB?

PLC is an industrial computer used for automation, while PCB is a circuit board that connects electronic components.

What are the different types of PLC boards?

PLC boards vary by application and can be relay output, analog I/O, digital I/O, or communication boards.

What are the 3 types of PLC?

PLCs come in three main types: compact, modular, and rack-mounted, each suited for different industrial needs.

What are the components of a PLC panel?

A PLC panel typically includes a PLC processor, I/O, power supply, and communication modules.

What is a PLC System?

A PLC system is a complete setup for industrial automation, consisting of a PLC, I/O interfaces, and often software for control and monitoring.

Article Content

CONTROL CABINET WIRING

This guide will give you and overview of the most popular RS PRO parts for professional wiring of a control cabinet. Starting from bootlace ferrules to the right stripping and crimping tools, to cable

Basic electrical design of a PLC panel (Wiring diagrams)

Once the electrical design is complete, a layout for the controls cabinet is developed, as shown in Figure 2. The physical dimensions of the devices must be considered, and adequate space

Guide to PLC Cabinets: Types, Layout, Wiring & Components

© 2026 ALFA PRO COMMUNICATION SYSTEMS (Pty) Ltd - All rights reserved

This guide will walk you through the essential steps to design and wire an efficient PLC control cabinet. We''ll cover key topics like selecting components, cabinet layout, cooling, wiring, and

Control Panel Wiring Standards: How to Build a Professional and

Learn professional control panel wiring standards, including cabinet layout, grounding rules, wiring principles, common mistakes, EMI prevention, and best practices for building clean and

Industrial Automation Wiring and Grounding Guidelines

The wiring guidelines are based on the assumption that you guard your system against the effects of transient emi by using surge-suppressors to suppress transient emi at its source.

Industrial Control Panel Wiring Best Practices: A Guide | Keltour

In this blog post, we explore how proper wiring methods, ferrules, numbering, colour coding, and labelling in an industrial control panel improve safety, reliability, and maintenance efficiency.

Reference Manual Control Panels compliant with IEC Standards and ...

We reserve the right to make changes and revisions to these typical circuit diagrams and interpretations of standards and directives without prior announcement.

Control Cabinet – Wiring | WAGO

The most time-consuming step in control cabinet manufacturing is wiring. Using WAGO''s connection technology, you benefit from fast, vibration-proof,

Industrial Control Panel Design Guide

Portions of NFPA 79 relate to control circuits and control functions, operator interface and control devices, location, mounting, and enclosures for control equipment, and other topics relevant to the

CONTROL CABINET WIRING

Harmonised Compliant to European Harmonised Standards H05V-K and H07V-K, harmonised cables are colour-coded PVC sheathed cables with a single stranded untinned copper core. Harmonised

Guide to PLC Cabinets: Types, Layout, Wiring

Learn the essentials of designing and wiring PLC control cabinets, including component selection, cooling, wiring tips, and safety standards.

Wire control panel

© 2026 ALFA PRO COMMUNICATION SYSTEMS (Pty) Ltd - All rights reserved

How should you wire a control panel in accordance with UL 508A? The regulations in the North American control panel standard UL 508A cover every single area of a control panel —up to and

Industrial Control Panel Design Standards and Best Practices

Industrial control panels are at the heart of control systems. Learn about the standards and regulations that dictate industrial control panel design for safety and efficiency, including NFPA

Cabinet design and EMC

EMC-compliant design and control cabinet configuration For detailed configuration instructions regarding the EMC-compliant design of drives and control cabinet configuration, refer to the "SINAMICS Low

Control Panel Wiring Standards: How to Build a

Learn professional control panel wiring standards, including cabinet layout, grounding rules, wiring principles, common mistakes, EMI prevention,

Industrial Automation Wiring and Grounding Guidelines

Purpose This publication gives you general guidelines for installing an Allen-Bradley industrial automation system that may include programmable controllers, industrial computers, operator

Industrial Control Wiring, AC Drives, and 3 Phase Motors — TW Controls ...

Power Up Your Career: Essential Industrial Wiring & Motor Control Expertise! Ready to command the electrical heart of industrial systems? Dive into the vital world of industrial control wiring, AC drives,

Industrial Control Panel Wiring Best Practices: A Guide | Keltour

Discover how wiring methods, ferrules, numbering, and colour codes improve safety, reliability, and efficiency in an industrial control panel.

Related Video Reference

This video was associated with the source search result. Verify technical details against current product documentation and project requirements.

© 2026 ALFA PRO COMMUNICATION SYSTEMS (Pty) Ltd - All rights reserved

Contact Us

Continue your research online:

Website: https://alfa-pro.co.za
Technical inquiry: https://alfa-pro.co.za/contact.html

This document is for preliminary research. Verify specifications against current standards, product documentation and project requirements.

© 2026 ALFA PRO COMMUNICATION SYSTEMS (Pty) Ltd - All rights reserved